WARMLY YOURS
MAKING COMFORT EASY

SCE-120 (ETO2)
SNOW MELT CONTROL WIRING DIAGRAM

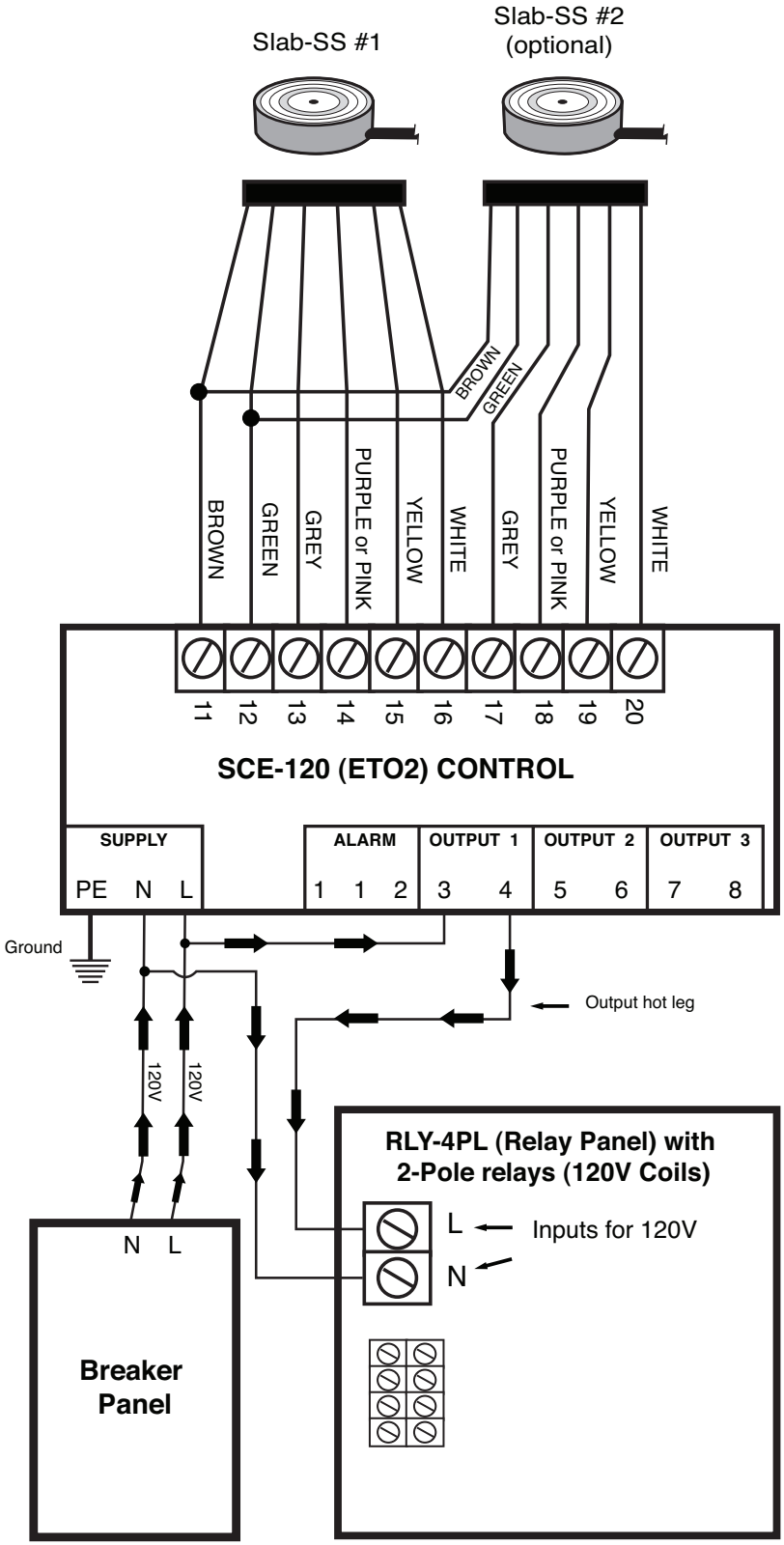

10249 12/10