WARMLY YOURS
MAKING COMFORT EASY

Automatic Snow/Ice Melting System Control Panel

MODEL SCP-120 (APS-3C) SNOW SWITCH

Installation and Operation Manual

Safety

Make all electrical connections in compliance with the National Electric Code (NFPA 70) and local electrical code. If you have questions concerning the installation or application, contact Customer Service.

General

Introduction

The SCP-120 Series Snow Switch Control Panels, when used with compatible sensors, automatically controls snow and ice melting systems, ensuring complete snow and ice melting at minimum operating costs. Typical applications include pavement, sidewalk, loading dock, roof, gutter and down spout snow/ice melting.

The SCP-120 provides a relay closure interface for use with energy management computers (EMC). This feature can also be used for general purpose remote control annunciation and other advanced applications. Simple remote control features are also provided by the RCO Remote Control for the SCP-120.

All sensor and communications wiring is NEC Class 2 (high voltage). This simplifies installation while enhancing fire and shock safety.

Environmental Interfaces

The SCP-120 determines when to start heater operation by monitoring the signals produced by up to six customer supplied environmental sensors paralleled together using a three-wire bus. Available sensors include:

- AIR-SS Aerial Snow and Ice Sensor

When used either alone or in combination, these sensors accurately determine whether or not snow and ice melting is required. This data is communicated back to SCP-120.

Sensors measure ambient temperature and detect moisture, in any form. Snow, sleet, freezing rain, etc. is assumed if moisture is present at temperatures below 38°F (3.33°C). Beginning heater operation at temperatures slightly above freezing is essential to meeting customer expectations. It takes a long time for snow to melt at 34°F.

Sensors employ a heated interdigitated grid for moisture detection. Heat melts frozen precipitation to form water which is a better conductor of electricity. Circuits detect water as a change in resistance between the fingers of the interdigitated grid. The temperature of the moisture sensor is regulated electronically.

Each sensor has its own microcontroller for signal processing, logic and control. This enables the use of a simple 3-wire bus to connect sensors with the control. Extension wire function and colors follow:

- Supply(Red)
- Signal(White)
- Ground(Black)

The supply voltage is nominally 24 VAC. The signal is inverted. That is, snow produces a ground and its absence produces 24 VAC rectified. Sensors are wired together in parallel in a “wired OR” configuration. That is, red to red, white to white and black to black. When several sensors are connected in parallel, any sensor asserting a ground on the signal conductor enables snow melting heater operation. No ground on the signal line indicates the absence of snow. The SCP-120 includes a temperature sensor for measuring pavement slab or ambient air temperature. Its signal is used to provide an adjustable high limit temperature function.

High Limit Sensor

The calibrated 40°F to 90°F (4°C to 32°C) high limit sensor prevents excessive temperatures when using constant wattage and MI heaters. It also permits safe testing at outdoor temperatures too high for continuous heater operation. The temperature sensor is included.

There are two DIP switch configurable operation modes for the high limit thermostat. The factory default operation mode uses the high limit thermostat as a slab temperature regulator, preventing heater operation at temperatures above the set HIGH TEMPERATURE LIMIT. The optional operation mode uses the high limit thermostat as an ambient air sensor, preventing heater operation at temperatures above the set HIGH TEMPERATURE LIMIT until the temperature comes back within limits. The details of operation in each mode are as follows:

Slab Regulating Thermostat Mode

- High temperature causes unit to turn off heaters, if running, and to ignore any call for heater operation from the panel, RCO or EMC.
- High temperature continues any hold-on cycle that was initiated before the high temperature condition. If the slab temperature drops within limits during the hold-on time the heater will be turned back on.
- The HEATER CYCLE functions normally.

Ambient Temperature Sensor Mode

- High temperature causes unit to turn off heaters, if running, and to ignore any call for heater operation from the panel, RCO (RCU) or EMC.
- High temperature cancels any hold-on cycle that was initiated before the high temperature condition.
- If the HEATER CYCLE switch is operated in a high temperature condition the heater(s) will be turned on for a maximum of 30 seconds. A new HEATER CYCLE can not be initiated for another two minutes after that.

Initial Settings

When first placing the system in service, the hold-on time should be set to an initial value. Three to five hours is suggested as a starting point. If the heaters turn off before the snow is completely cleared and the melt water evaporated, increase the hold-on time by an hour or two. If the heaters operate for several hours after the pavement is clear and dry, decrease the hold-on time by an hour. Continue this process until satisfactory performance is achieved.

The small amount of energy wasted by a slightly excessive hold-on time is secondary to complete snow clearing and melt water evaporation. Incomplete operation is not desirable since this can result in re-freezing melt water which creates a slippery ice film.

If The System Turns Off Too Soon

If the system turns off before the pavement is clear and dry, toggle the heaters on for the hold-on using the HOLD-ON switch on the front panel of the control. Repeat as many times as is necessary until the pavement is clear and dry. If the heaters remain operating after the pavement is clear and dry, terminate the hold- on cycle with the HOLD-ON switch. Normal operation resumes if it starts snowing during hold-on.

Energy Management Computer (EMC) Interface

The SCP-120 interfaces an EMC via relays. Inputs from the EMC include OVERRIDE ON which causes heater operation and OVERRIDE OFF which inhibits heater operation. These functions are independent of weather conditions and the status of the hold-on timer. The interface provides five system status contact closures for the EMC including SUPPLY, SNOW, HEATER, ALARM and TEMPERATURE LIMIT.

Absent signals from the EMC, the SCP-120 control panel controls the heaters based on environmental conditions. Automatic snow melting control is the default condition of the system.

SCP-120 Front Panel

The SCP-120 has indicators, adjustments and a switch for local control of the snow melting system. Indicators include LED lights for SUPPLY, SNOW, HEAT, EMC, TEMP LIMIT and GFEP. Adjustments provided allow for the calibrated adjustment of system HOLD-ON time from zero to ten hours (or off) and TEMP LIMIT for the high-limit temperature adjustment with a range of 40° to 90°F (4° to 32°C). The HEATER TOGGLE switch allows for the starting and stopping of a manual HEATER CYCLE.

Figure 2 shows the SCP-120 front panel layout.

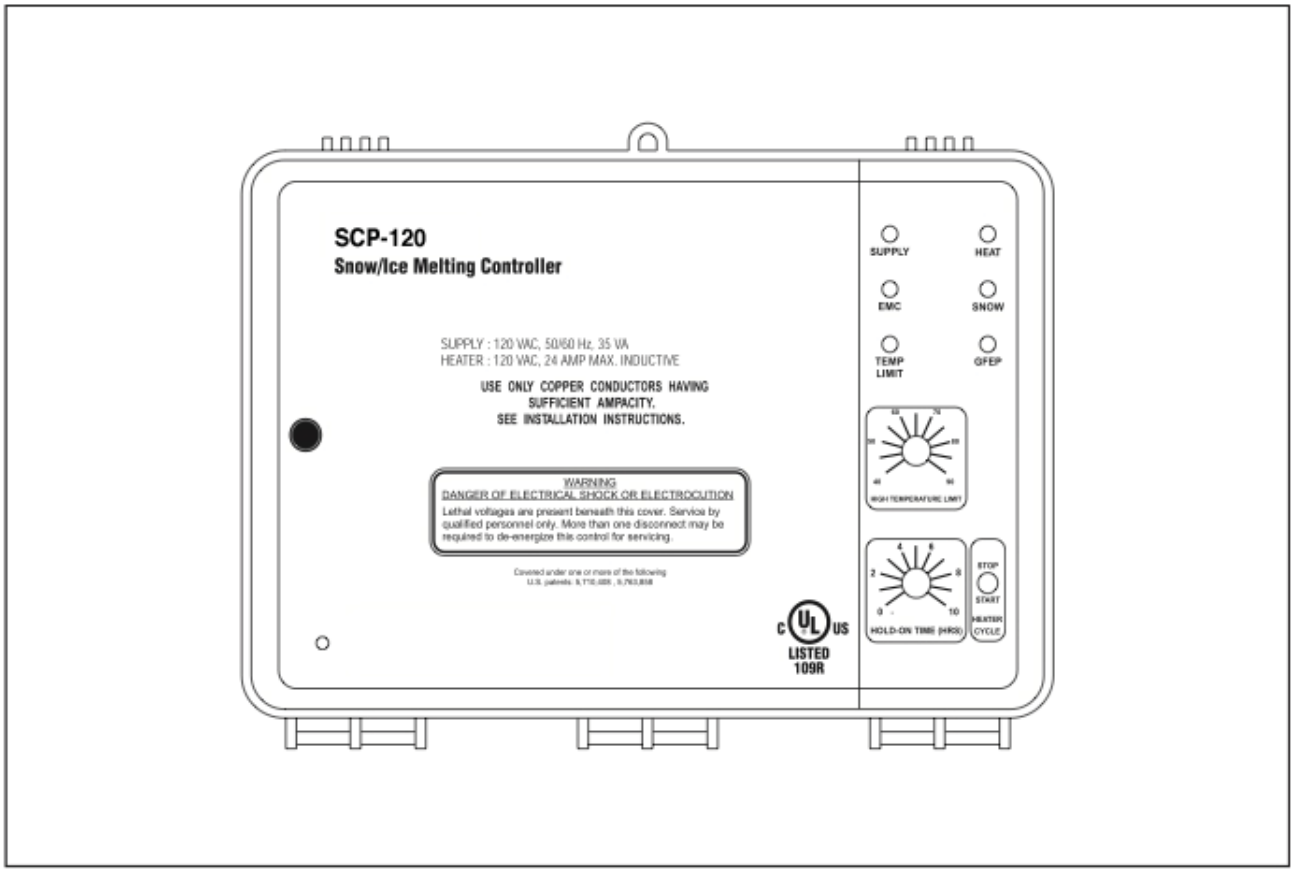

Figure 2: SCP-120 front panel detail

RCO Remote Control Unit

The RCO Remote Control Unit is used with the SCP-120. It adds remote control and status display to the SCP-120 control at a location convenient to personnel capable of observing snow melting system operation.

Snow, slush or ice, either alone or in combination, must contact at least one sensor to start melting. Heater operation continues until all sensors are dry. Depending on the rate of fall, snow density, wind velocity, and other factors, heater operation must continue for a period of time after the last sensor dries off. Slush tracked by vehicle and pedestrian traffic along with blowing and drifting snow are problems that are hard to predict.

The cycle timer in the SCP-120 begins when the last sensor dries off and continues for an adjustable period of up to 10 hours to keep the heaters operational until the pavement is completely dry. Otherwise, residual water could re-freeze and create a hazardous condition.

The RCO provides a two, four, six or eight hour CYCLE TIME adjustment that is independent of the cycle time in the SCP-120. This allows treatment of the condition requiring an additional heater cycle as the exception rather than the rule in order to minimize energy use.

Operating the HEATER CYCLE switch operates heaters for the CYCLE TIME which is normally set to 2 hours. Operating the HEATER CYCLE switch during the cycle time stops the timer. If the pavement or ambient temperature exceeds the SCP-120 HIGH LIMIT TEMPERATURE setting, the heater duty cycle is reduced or disabled to prevent overheating.

Status indicators include SUPPLY and HEAT. These perform the same functions as those on the SCP-120 front panel.

Figure 5 shows the RCO layout.

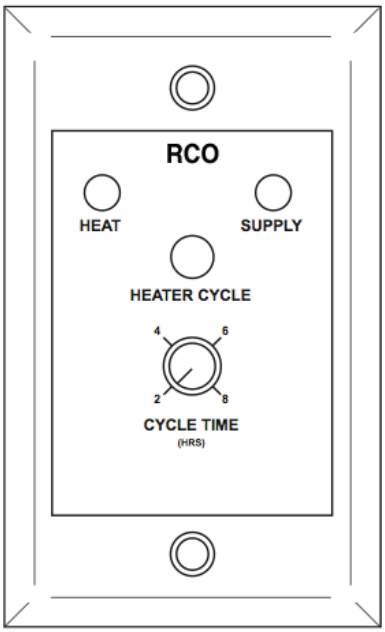

Figure 5: RCO

SPECIFICATIONS

All Specifications apply to SCP-120

General	
Area of use	Nonhazardous locations
Approvals	c UL us LISTED 109R — Type 873 Temperature Regulating Equipment
Enclosure	
Protection	NEMA 3R
Cover attachment	Hinged polycarbonate cover, lockable
Entries	SCM120: 3 × 1-1/16" entries (120 VAC Single Phase ONLY
Material	Polycarbonate
Mounting	Wall mounted

Control

Supply	SCP-120: ETI PN 22470: 120 VAC, 50/60 Hz, 35 VA
Load	SCP-120: ETI PN 22470: 120 VAC, 24 amp max. inductive ETI PN 22471: 208-240 VAC, 24 amp max. inductive
Contact type	SCP-120: Form C
Maximum Ratings	SCP-120: Voltage: 120VAC Current: 24 amps
Heater hold-on timer	0 to 10 hours; actuated by snow stopping or toggle switch
System test	Switch toggles the heater contact on and off. If temperature exceeds high limit, heater cycles to prevent damage.

Snow/Ice Sensors

Sensor type	Up to 6 sensors from the AIR-SS product family
Circuit type	NEC Class 2
Lead length	Up to 500’ (152m) using 18 AWG 2-wire jacketed cable Up to 1,000’ (304m) using 12 AWG 2-wire jacketed cable

High Limit Sensor

Adjustment range	40°F to 90°F (4°C to 32°C)
Dead band	1°F (0.6°C)
Sensor type	Thermistor network
Circuit type	NEC Class 2
Lead type	Up to 500’ (152m) using 18 AWG 2-wire jacketed cable Up to 1,000’ (304m) using 12 AWG 2-wire jacketed cable

Energy Management Computer (EMC) Interface

Inputs	OVERRIDE ON (10 ma dry switch contact) OVERRIDE OFF (10 ma dry switch contact)
Outputs	SUPPLY (10 ma dry switch contact) SNOW (10 ma dry switch contact) HEAT (10 ma dry switch contact) HIGH TEMP (10 ma dry switch contact) ALARM (10 ma dry switch contact)

Environmental

Operating temperature	–40°F to 160°F (–40°C to 71°C)
Storage temperature	–50°F to 180°F (–45°C to 82°C)

OPERATION

SCP-120

The snow melting system can be monitored and controlled either locally from the SCP-120 itself or from two remote locations including:

- RCO Remote Control Unit
- BEMC

Local Control from the SCP-120

Indicators:

- SUPPLY (green) shows that power is present.
- SNOW (yellow) shows that there is a snow/ice signal originating from at least one of the sensors attached to the system.
- HEAT (yellow) shows that there is a call for heat. This happens during snow and for the hold-on time thereafter or when the heater cycle switch is operated.
- EMC (yellow) shows that the interfaced Energy Management Computer is presently overriding local system control.
- TEMP LIMIT (red) shows that either the pavement temperature is above the set HIGH TEMPERATURE LIMIT and there is a call for HEAT or the ambient air temperature is above the set HIGH TEMPERATURE LIMIT. The SCP-120 can be configured to monitor slab temperature or ambient air temperature but not both.

Adjustments:

- HOLD-ON TIME adjustment sets the time that heaters operate after snow stops. Doing this is necessary to make certain the pavement dries before heating ceases. This prevents refreezing. Try an initial setting of 3-5 hours. Increase, if necessary. Reduce with care since energy savings are being traded for an increased likelihood of refreezing.
- HIGH-LIMIT TEMPERATURE adjustment sets the maximum deicing temperature.

Switches:

- HEATER CYCLE switch momentarily toggled down will start a manual heater cycle for the set HOLD-ON TIME or restart the HEATER CYCLE if on was already in progress. Momentarily toggled up will cancel a heater cycle if one is in progress.

Remote Control from the RCO

Indicators:

- SUPPLY (green) shows that power is present.
- HEAT (yellow) shows that there is a call for heat. This happens during snow and for the hold-on time thereafter or when the heater cycle switch is operated.

Adjustments:

- CYCLE TIME adjustment sets the time heaters will operate when HEATER CYCLE switch is momentarily depressed at the RCO.

Switches:

• HEATER CYCLE switch momentarily depressed will start a manual heater cycle for the set CYCLE TIME. Momentarily depressed while heaters are being operated by a hold-on timer or during manual heater cycle will end the heater cycle. Heater operation during snow conditions cannot be canceled in this manner.

Remote Control from the EMC Interface

Please see the EMC section of the manual for interface details.

Energy Management Computer (EMC) Interface

The SCP-120 Series provides an EMC interface to communicate with the EMC of building automation systems. The EMC interface provides 10 mA dry switch contacts for communicating status to the EMC or starting or stopping the system from the EMC.

EMC interface outputs:

• Output Common

• HEAT indicates that there is a call for heat. This happens during snow and for the hold-on time thereafter or when the heater cycle switch is operated.

• SNOW indicates that there is a snow/ice signal originating from AIR-SS sensor attached to the system.

• ALARM

• SUPPLY indicates that power is present.

• TEMP LIMIT indicates that either the pavement temperature is above the set HIGH TEMPERATURE LIMIT and there is a call for HEAT or the ambient air temperature is above the set HIGH TEMERATURE LIMIT. An SCP-120 Series control can be configured to monitor slab temperature or ambient air temperature but not both.

EMC interface inputs:

• OVERRIDE ON can be used to override an attached SCP-120 control in order to turn heaters on. A normal contact closure will turn on heaters until operation is cancelled. If the EMC cycles the OVERIDE ON relay on and off again within more than 32 milliseconds but less than 300 milliseconds the attached APS “C” Series control will begin a manual heater cycle and run for the HOLD-ON TIME set at the panel.

• OVERRIDE OFF can be used to override an attached SCP-120 control in order to turn heaters off. A normal contact closure will turn off heaters. If the EMC cycles the OVERIDE OFF relay on and off again within more than 32 milliseconds but less than 300 milliseconds the attached SCP-120 control will end a manual heater cycle.

DIP Switch Settings HLT

DIP Switch Settings			
1	2	3	4
----	----	Off	----

Slab Regulating Temp. Sensor

DIP Switch Settings			
1	2	3	4
----	----	On	----

GF disabled

Figure 8: DIP Switch Setting for High Limit Sensor

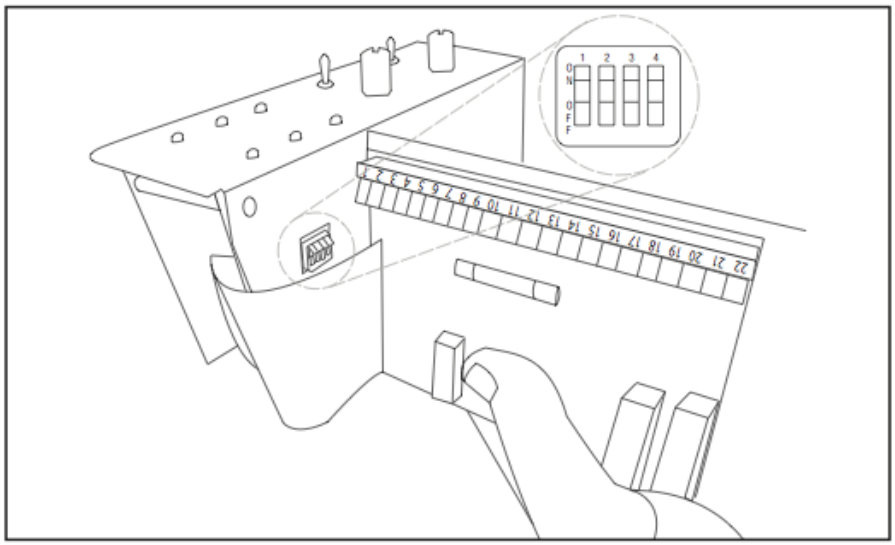

Configuring the High Limit Sensor

Dip Switch pin 3 is used to set the high limit sensor operation to one of two possible operational modes:

- OFF sets the high limit sensor as a slab regulating temperature sensor.
- ON sets the high limit sensor as an ambient air sensor.

OFF is the factory default.
Index 8 shows how to configure the high limit sensor mode at the DIP switch.

Factory Use Only

DIP switch pin 4 is for factory use only. The use of pin 4 except by authorized personnel may lead to improper operation of the SCP-120

Bypassing the High Limit Temperature Sensor

If, for any reason, you need to operate the system without the High Limit Temperature Sensor (for trouble shooting or while waiting for a replacement sensor) you can temporarily replace the sensor with a 470K resistor. The resistor will allow the system to run as if the sensed temperature was 40°F (4.4°C).

Refer to Figure 23 for placement of resistor.

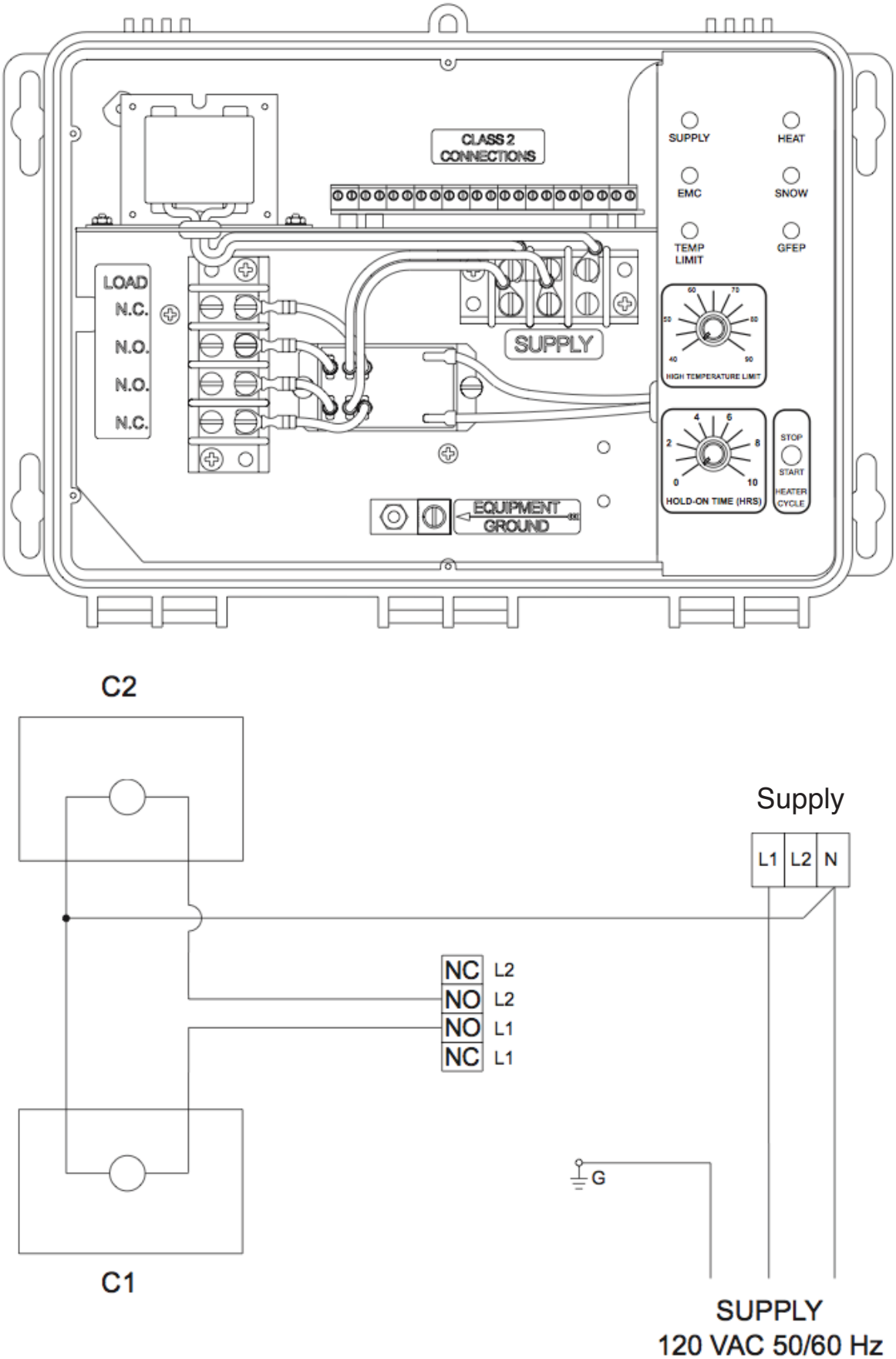

Figure 10: 120 VAC SCP-120 Operating two electrically held contactors

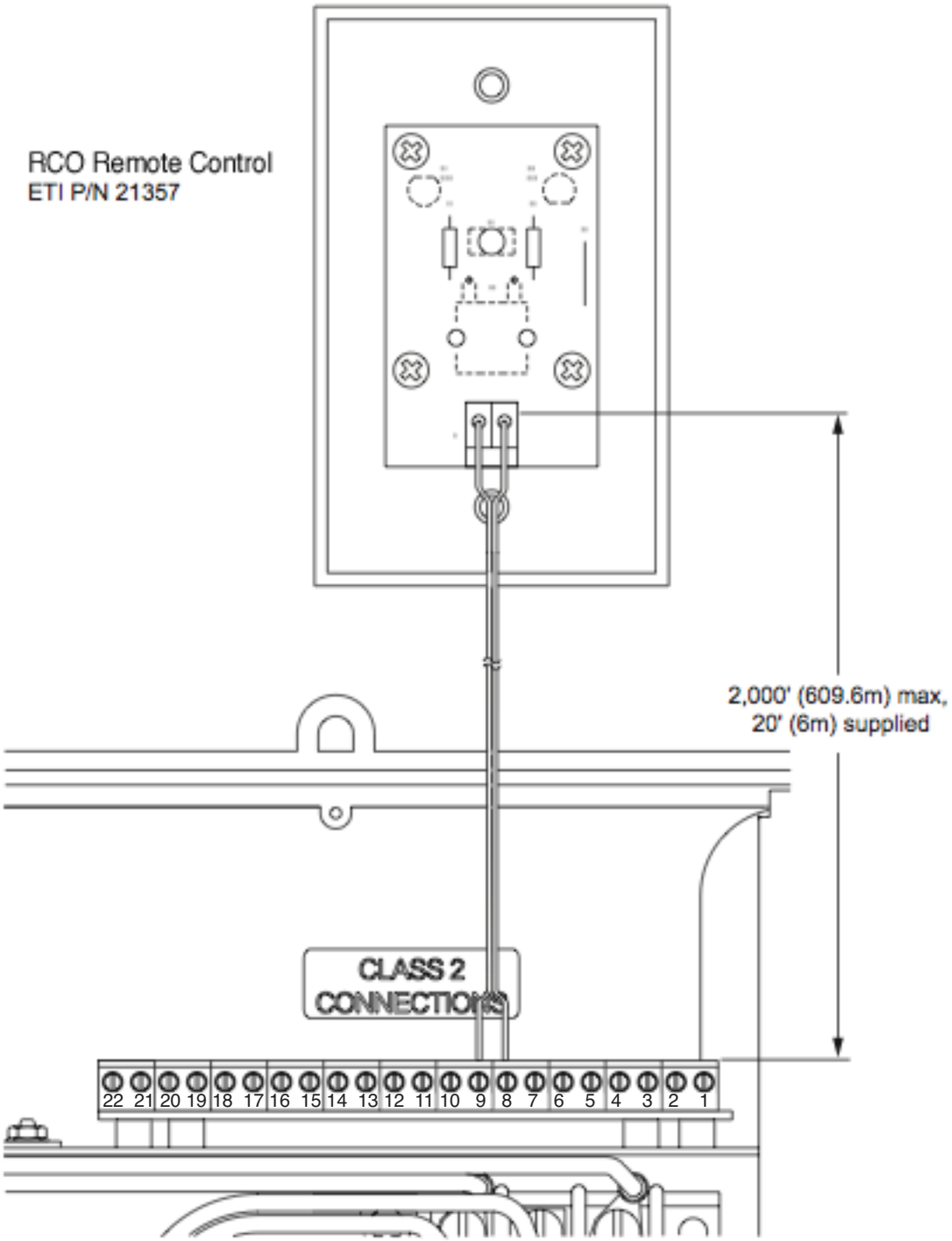

Figure 16: SCP-120 & RCO remote connection

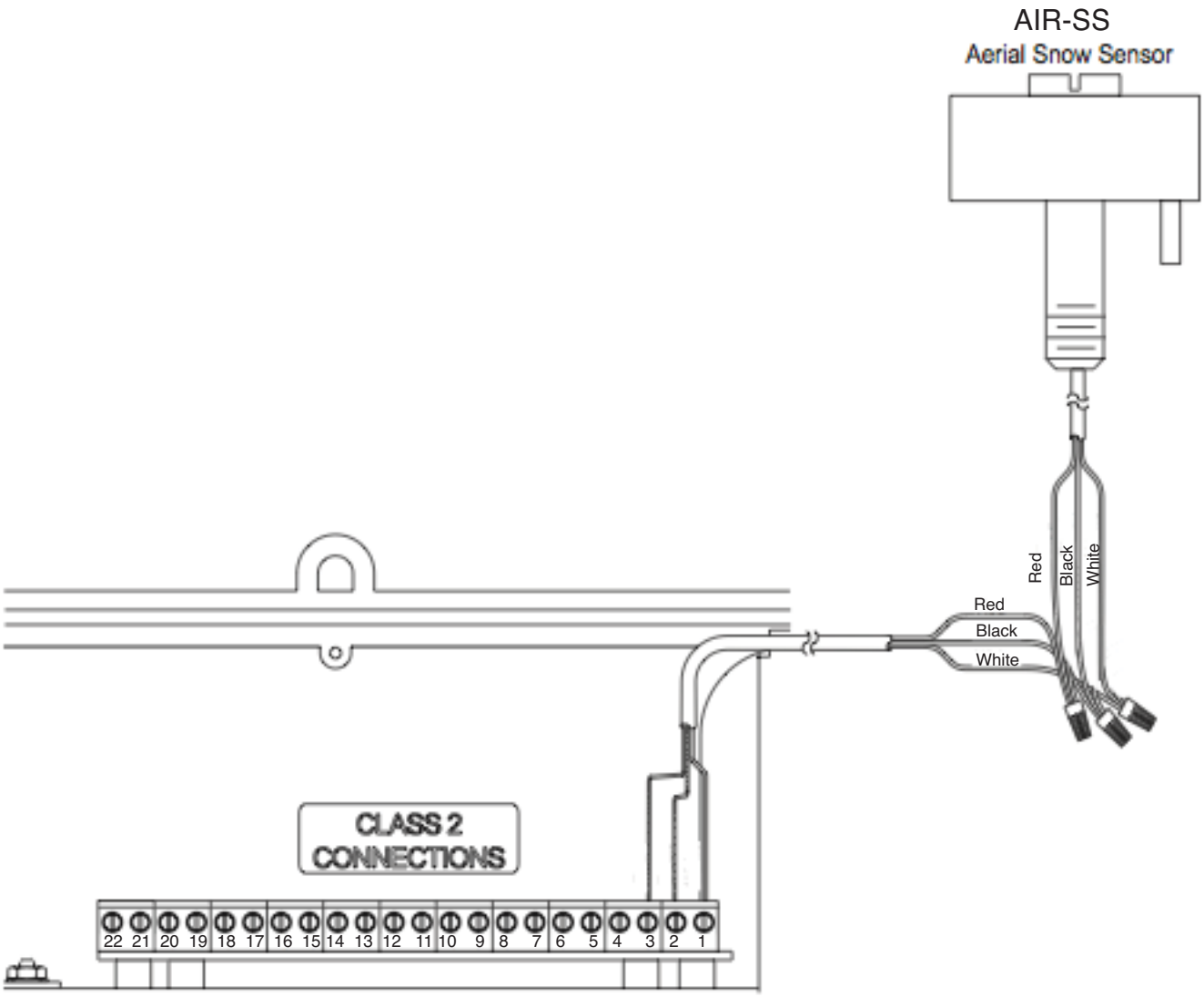

Figure 19: SCP-120 Sensor Connections

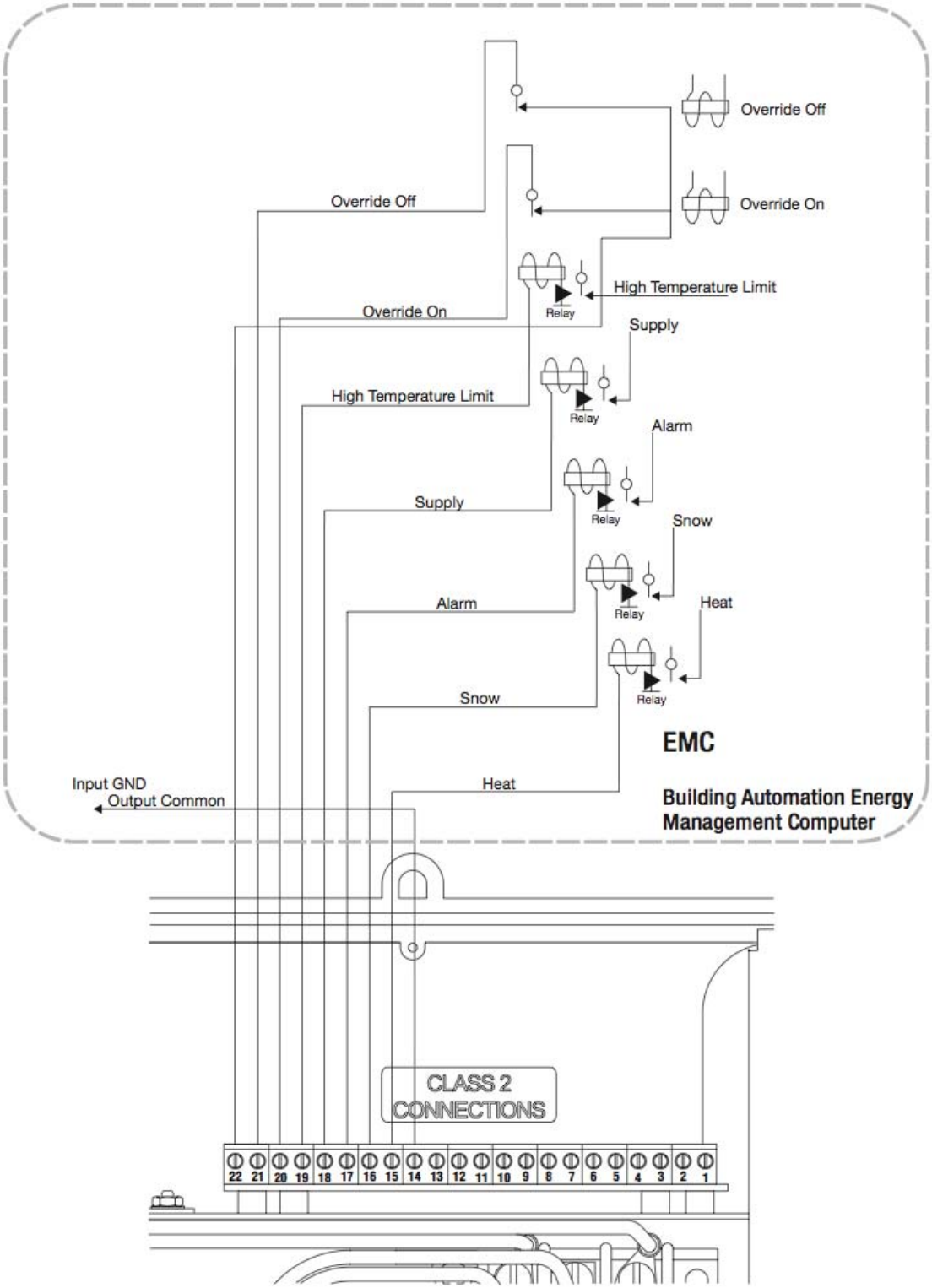

Figure 20: SCP-120 EMC connections

Figure 21: SCP-120 Electrician's DVM

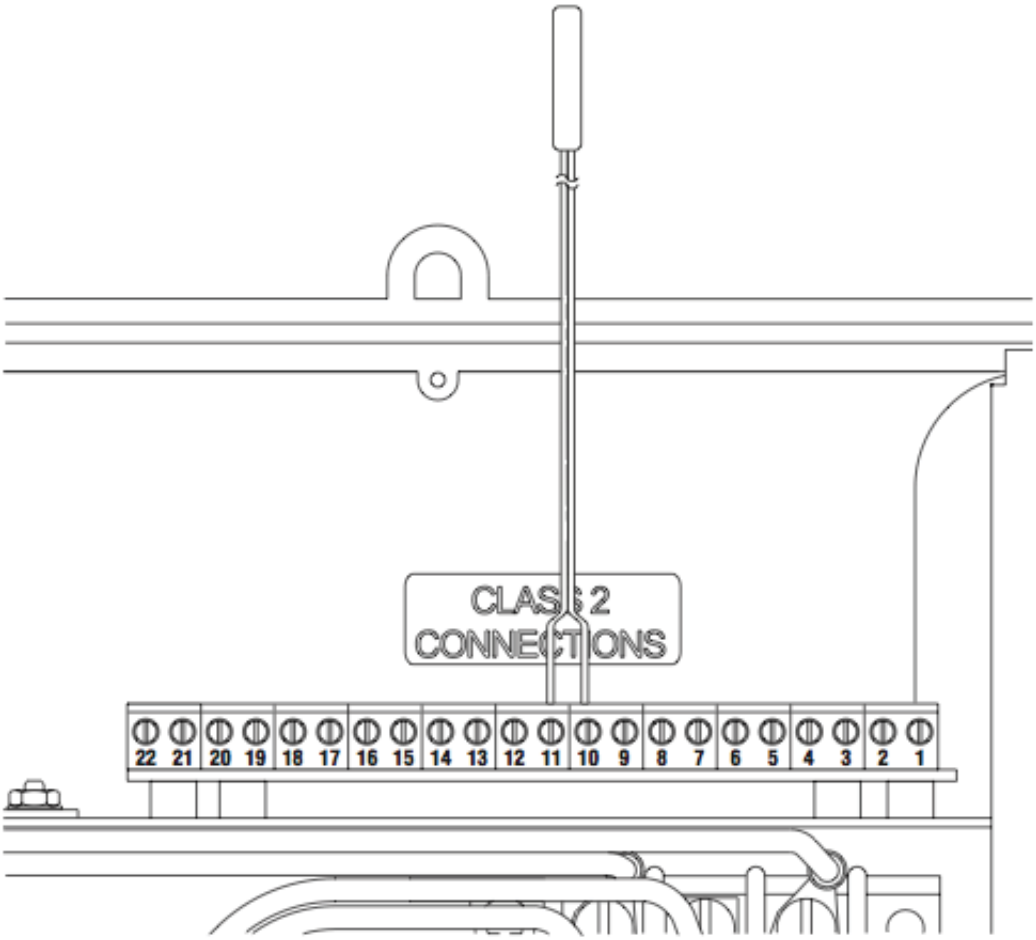

Figure 22: SCP-120 (Slab or Ambient High Limit Sensor)
95-107 ohms (on 200k scale of ohms meter) Thermistor connections

Contactor Connections

Contactor Number	Connection
1	Sensor Connection (White Wire)
2	Sensor Connection (Black Wire)
3	Sensor Connection (Red wire)
4	Satellite Panel Connection
5	Satellite Panel Connection
6	Satellite Panel Connection
7	Satellite Panel Connection
8	RCO Connection
9	RCO Connection
10	Thermistor Connection
11	Thermistor Connection
12	Electrician’s DVM
13	Electrician’s DVM
14	Output Common
15	Heat
16	Snow
17	Alarm
18	Supply
19	High Temperature Limit
20	Override On
21	Override Off
22	Close Override On/Off Circuit

WARMLY YOURS
MAKING COMFORT EASY

APS-3C AUTOMATIC CONTROLLER
WIRING TO RELAY (120V)

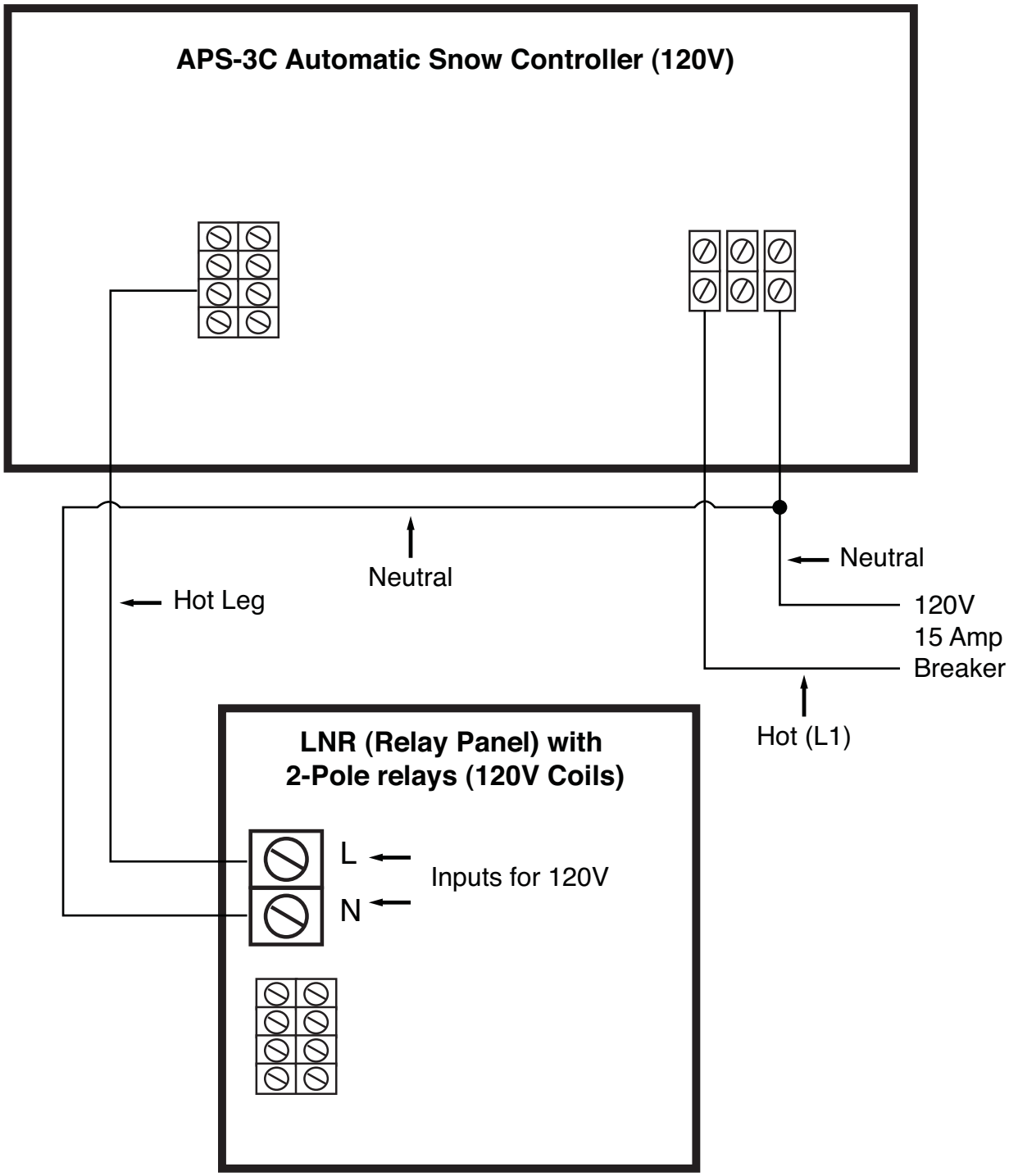

WARMLY YOURS
MAKING COMFORT EASY

APS-3C AUTOMATIC CONTROLLER
WIRING TO SENSORS & RCU (CLASS 2 CONNECTIONS)

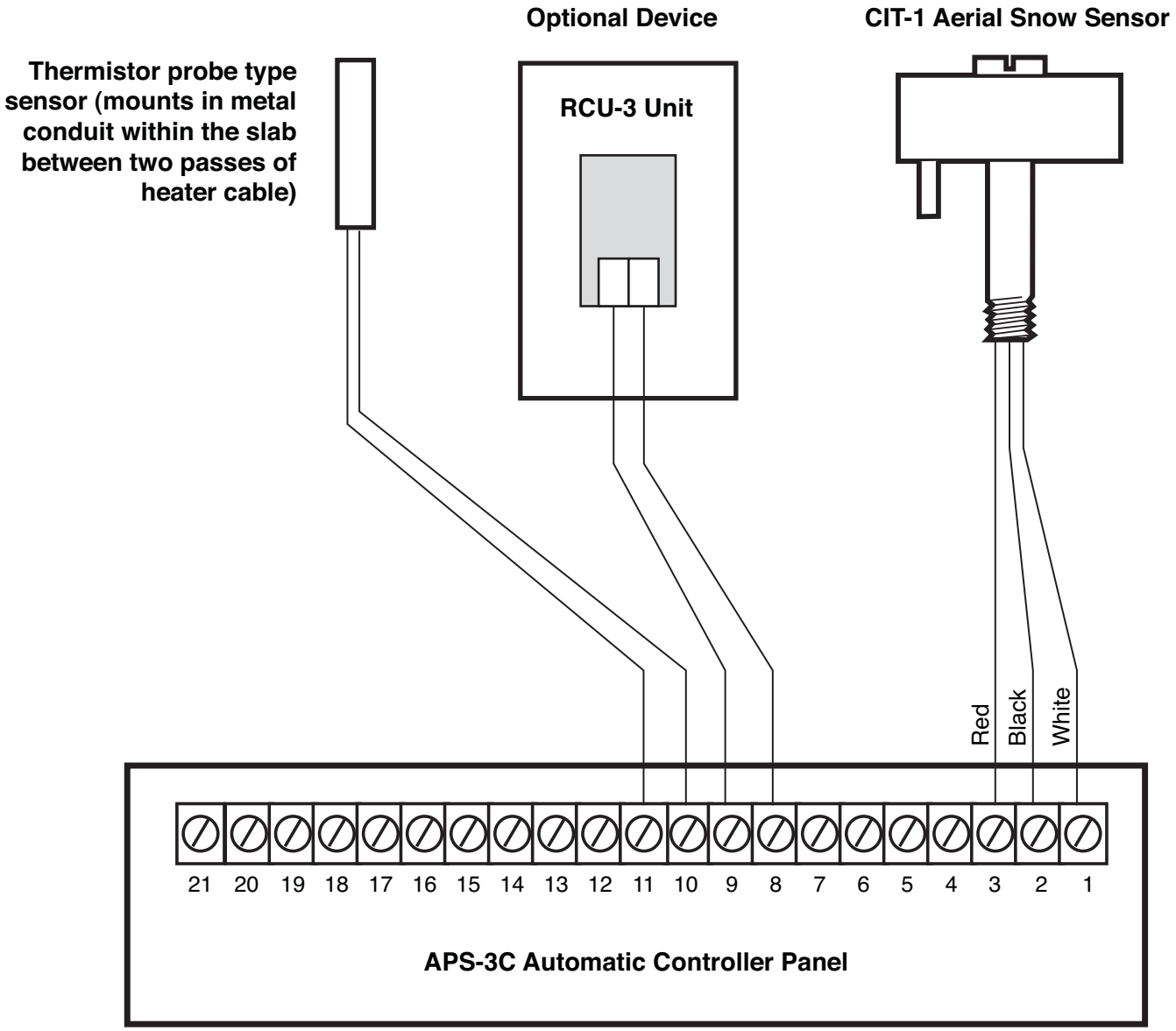

10272-A 1/11