WARMLYYOURS
RADIANT HEATING

Installing Floor Heating Under Concrete Slabs

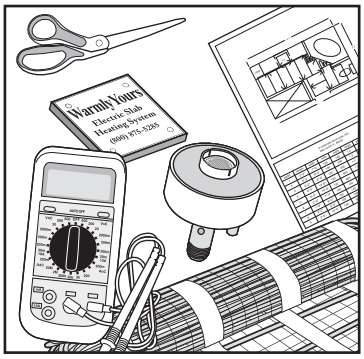

Getting Started Material and Tools Required:

WarmlyYours Snow Melt Mats and/or Cables
Controller, sensor(s), relay panel and Plaque
Custom Design Layout (provided FREE with order)
Digital Ohms Meter & 500 VDC Digital Megohm Meter (Megger)
Amp Meter, Plastic cable ties, & Scissors

Please call WarmlyYours (800) 875-5285 for 24/7 installation and technical support if needed.

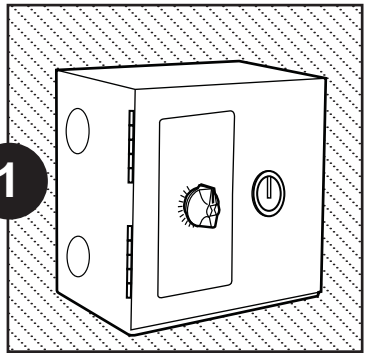

Step 1 – Electrical Rough-In

The electrician will supply appropriately sized dedicated breakers for each heater circuit (30mA trip GFPE breakers may be required by NEC or local codes). The relay panel(s), if necessary, must be installed, and power routed from the breakers to the relay panel(s). Any junction box(es) required for cold lead extensions/splicing should be installed at this time. The thermostat and its junction box, relay panel(s), if necessary, and associated wiring & conduit should be installed.

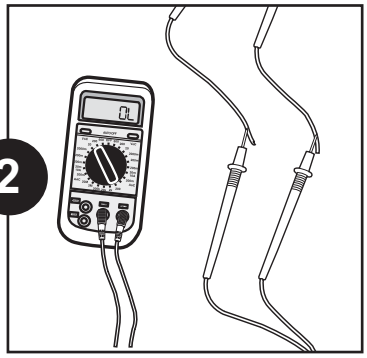

Step 2 – Mat/Cable Heater Installation

When material order shipment arrives, use ohms meter to test each mat heater (between the two conductors), and verify number with the UL tag. Also, test each heating mat for megohms (between conductor and yellow/green ground wire). The 500 VDC Megohm Meter tests for insulation resistance around the conductor(s), and should read infinite, OL, or a minimum of 10 megohms.

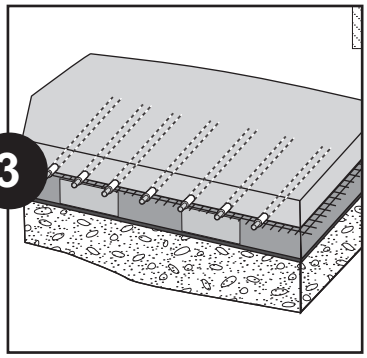

Step 3 – Basic Preparation

The concrete installer ensures that the base has at least 8” to 12” of crushed rock aggregate that has been spread, and rolled over or tamped down. A 4” to 12” layer of sand is spread evenly over the aggregate. 2” polystyrene insulation (or better) must be placed on top of the sand layer (insulation must never make direct contact with heating cable). This insulation should also be placed vertically around the perimeter of the slab to prevent “edge heat loss”. Heavy-gauge wire mesh or rebar should be used for reinforcement (chicken wire is not acceptable). This rebar, or wire mesh, may be propped up with wire chairs or concrete pavers.

Step 4 – Heater & Sensor Placement

The electrician uses plastic cable ties to attach the heating cable/mats to the wire mesh at the appropriate spacing or pattern (as per the Custom Design Layout). Avoid any overlapping, touching, or crossing of heating wires. The slab temperature sensor should be ohms tested & then inserted into a ¾" rigid metal conduit and placed between two heating cable passes (or between mats) with its end capped off.

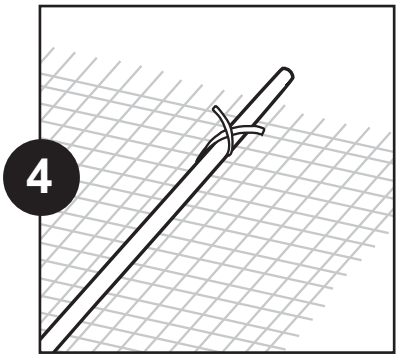

Step 5 – Concrete Pour & Heater Burial

The concrete installer pours 4" to 6" of concrete to bury the heating cables/mats so they end up 2" to 3" from the finished concrete surface. Installers must not pull up on the heating cables during the pour with rakes and or shovels. The electrician tests the heaters continuously with an ohms meter during the concrete pour. For "2 Step Pour" details, please contact WarmlyYours technical support.

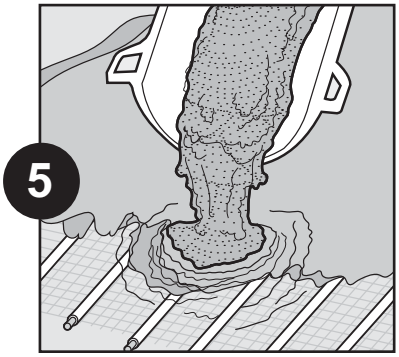

Step 6 – Re-test Mat/Cable Heaters

The electrician makes a final ohms & megohms test on each mat/cable. The ohms value of the sensor should be verified at this time. The electrician should enter all test results on the warranty documents.

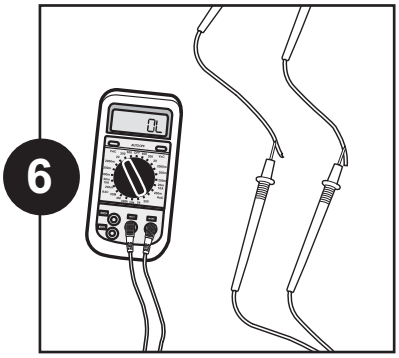

Step 7 – Final Wiring & Amp Testing
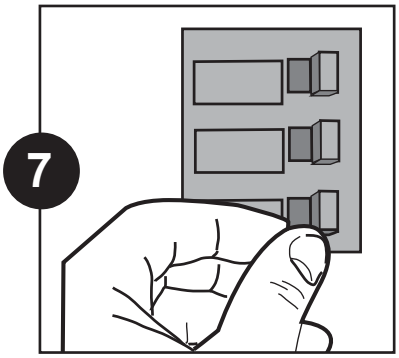
The Electrician completes all wire splicing in the junction box(es). All thermostat, relay panel (if needed), or sensor wiring should be completed. Breakers should be turned ON, and the system should be activated to allow the electrician to check the amp draw of each heater.